A WIRTGEN GROUP COMPANY

VÖGELE

Tracked Paver

SUPER 1900-3 G

G

PERFECT IN ALL CLASSES

The right paver for every job

VÖGELE's seamless product range is considered unique in the industry. Whether a service road or a motorway, an airfield or a race track, a new construction or a rehabilitation job, thick or thin, hot or cold – customers will find the right machine in our paver range for every paving task.

VÖGELE PRODUCT RANGE

MINI CLASS
> Pave width up to 3.5 m
> Laydown rate up to 300 t/h

COMPACT CLASS
> Pave width up to 5 m
> Laydown rate up to 350 t/h

UNIVERSAL CLASS
> Pave width up to 10 m
> Laydown rate up to 700 t/h

HIGHWAY CLASS
> Pave width up to 18 m
> Laydown rate up to 1,800 t/h

SPECIAL CLASS
> SprayJet
> InLine Pave

POWERFEEDER
> MT 3000-3(i) Standard
> MT 3000-3(i) Offset

G

RUGGED AND RELIABLE
Proven capabilities and value

VÖGELE

HIGHLIGHTS

Perfectly equipped

DRIVE

01 Drive concept

> Powerful and economical drive concept with a state-of-the-art diesel engine.

02 Efficient transmission of tractive power

> Thanks to powerful separate drives fitted into the sprockets for crawler tracks, engine output is translated into pave speed with no loss of power.

MATERIAL MANAGEMENT

03 Optimal mix feed

> Easy to feed thanks to extra large material hopper and long chassis.

> Perfect paving quality thanks to perfect material management.

04 Large push-rollers

> Very large oscillating push-rollers ensure convenient and shock-free docking of feed vehicles even on bends.

VERSATILITY

05 Wide range of applications

> Tracked Universal Class paver with a wide range of applications and pave widths up to 10 m.

06 The right screed for every application

> AB 480, AB 500, AB 570 and AB 600 Extending Screeds for asphalt job sites guaranteeing high quality and high evenness.

> SB 300 HD Fixed-Width Screed for roadbase applications.

OPERATION

07 ErgoBasic operating system

> Easy operation with the innovative and intuitive ErgoBasic operating system.

08 Niveltronic Basic System

> New and easy-to-use Niveltronic Basic System for Automated Grade and Slope Control.

01

02

03

04

05

06

01 Large material hopper specially adapted to the feed extra large vehicles.
02 Powerful separate drives fitted into the sprockets.
03 Easy operation with the innovative ErgoBasic operating system.
04 All the main paving functions can be controlled via the two handy screed remote control units.
05 Niveltronic Basic System for Automated Grade and Slope Control.
06 Perfect paving quality due to perfect material management.

SUPER 1900-3 G – the multifunction specialist with high performance

Robust, powerful and easy to operate

The 10 m class from VÖGELE is legendary. No other paver in the world can rival it for popularity among professional road construction teams.

The SUPER 1900-3 G-Tier takes and gives a lot. Cement-treated base (CTB) has become the established standard for road construction projects. Paving base courses up to 50 cm thick requires extremely powerful and durable pavers. VÖGELE's SUPER 1900-3 G is a cost-efficient, heavy-duty tracked paver designed for paving both water-bound materials and asphalt mixes.

Moreover, with a maximum pave width of 10 m, the SUPER 1900-3 G is exactly the right paver for use on motorway projects and rural roads. When it comes to power, the 6-cylinder diesel engine with 158 kW has what it takes to achieve pave speeds of up to 24 m/min.

MODERN DRIVE TECHNOLOGY

Efficiency, performance and low consumption

VÖGELE's modern drive concept is perfectly adapted to the large range of different uses of the multifunctional SUPER 1900-3 G-Tier. Delivering a powerful drive when maximum performance is called for, this Universal Class paver is exceedingly flexible in everyday operation.

Low input, maximum output – all drive components operate with maximum efficiency, from the diesel engine to the hydraulic system. Intelligent engine management with ECO mode keeps fuel consumption and noise levels low.

The SUPER 1900-3 G is powered by a high-performance 6-cylinder diesel engine rated at 158 kW. The modern engine complies with the Stage III Standard.

The engine features an ECO mode that reduces the nominal speed from 2,000 rpm to 1,700 rpm. This ECO mode reduces operating costs and noise emissions significantly. A low carbon footprint is guarantees to contribute to a better environment.

Powerful engine
developing 158 kW

ECO mode at 1,700 rpm
cuts operating costs

Large cooler assembly
for perfect cooling at low noise levels

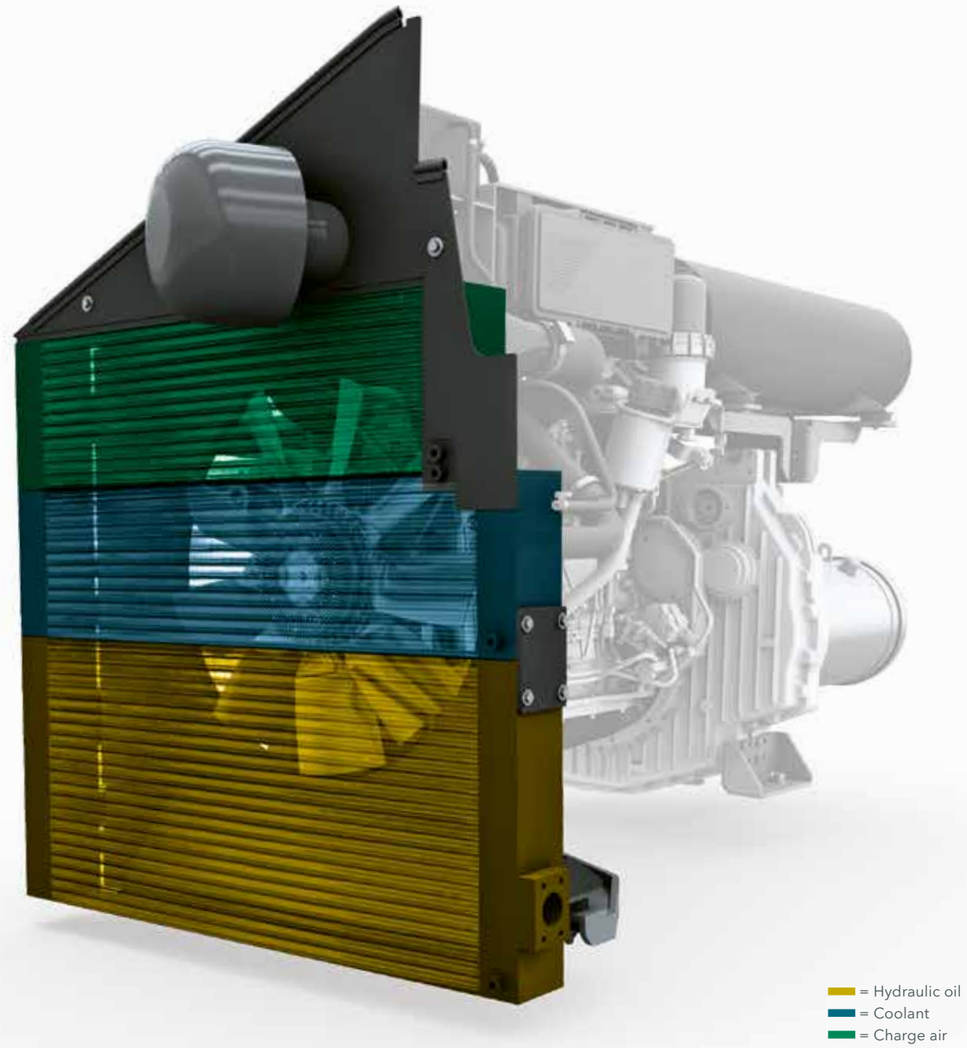

The large cooler assembly is made up of three parts. It ensures that the engine coolant, charge air and hydraulic oil are maintained at the optimum temperature.

A constantly high cooling capacity provides for ideal temperatures inside the hydraulic system and top performance of all drive units, even when working under full load, in all climate zones the world over.

PRECISION ON TRACKS

The optimized crawler unit with additional track carrier rollers maximizes the quiet running of the paver. The electronically controlled separate drives installed in the sprockets of the crawler tracks permit constant straight movement and precise steering through curves.

> Thanks to powerful separate drives fitted into the sprockets for crawler tracks, engine output is translated into pave speed with no loss of power.

> Long crawler tracks with large footprints provide for maximum tractive effort, allowing the paver to progress well at a constant speed even when operating on difficult terrain.

> New track pads deliver maximum traction on any base. Their high abrasion resistance makes for a long service life. They are also easy to replace during servicing.

Powerful separate drives
fitted into the sprockets

Positive tracking when moving straight-ahead
thanks to electronic control for each crawler track

PERFECT PAVING QUALITY THANKS TO PERFECT MATERIAL MANAGEMENT

A continuous flow of mix is key to ensuring uninterrupted and high-quality paving. That is why we attach such importance to professional material management when designing our pavers.

The material hopper and chassis of the SUPER 1900-3 G have been specially adapted to the feed extra large vehicles. Any mix lorry can dock onto the SUPER 1900-3 G without difficulty, thanks to its great length and low feed height. What is more, the wide, oscillating push-rollers can be moved 150 mm and 75 mm forward for a convenient and jerk-free material supply to the paver from any kind of feed vehicle. The large material hopper holds up to 15 tonnes. This not only permits rapid unloading of the feed lorries, but also ensures that there is an ample buffer of material when changing lorries.

> Any customary mix lorry can dock onto the SUPER 1900-3 G thanks to its length of 2,507 mm and low feed height of just 508 mm.

> Easy feed with mix thanks low material hopper, wide hopper sides and sturdy rubber baffles fitted to the hopper front.

> The large material hopper holding 15 tonnes is amply dimensioned so that a sufficient quantity of mix is stored at all times. No problem to tide over difficult situations such as paving under bridges, for instance.

Large material hopper holding 15 tonnes
specially adapted to large feed vehicles

Oscillating push-rollers
can be moved 150 mm and 75 mm forward

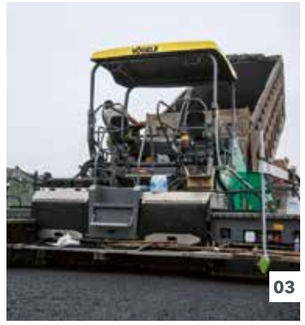

01 Powerful, separate hydraulic drives installed for conveyors and augers, thus permitting high laydown rates up to 1,000 t per hour.
02 Flexible adjustment of the augers in height, complete with bearing boxes and limiting plates for the auger tunnel.
03 The ability to adjust the augers in height also provides for an optimal head of material in front of the screed when placing thin layers or when the layer thickness varies.

Optimally designed mix conveying system with conveyors ascending towards the rear avoids segregation and diminishes wear of conveyors and conveyor bearings. The proportional control provided for conveyors regulates flow rates to precisely match the requirement of mix in front of the screed for excellent paving results.

VÖGELE > GOOD TO KNOW

Adjustable auger height

The augers of the SUPER 1900-3 G are mechanically infinitely variable in height up to 15 cm, even while paving.
This provides for quick and easy adaptation to the desired layer thickness across the full pave width.

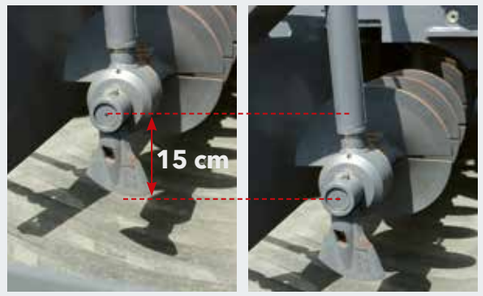

ERGOBASIC OPERATING CONCEPT

Ergonomic, simple and intuitive

The ErgoBasic operating concept was developed on the basis of the proven ErgoPlus operating system but it was tailored specifically to the needs and requirements of the users of the multifunctional paver SUPER 1900-3 G.

The aim was to develop an operating system that is just as quick, precise and intuitive to operate as the ErgoPlus 3 system for the "Dash 3" machines. This makes VÖGELE the only manufacturer to offer a standardised operating concept for all paver classes.

ERGOBASIC PAVER OPERATOR'S CONSOLE

Full control for the operator

Everything at a glance: the functions are arranged in a clear, logical and practical layout that has clearly been inspired by the ErgoPlus operating console. The type of controls and the symbols used are all in line with those of an ErgoPlus console.

Given the limited number of functions, there is no need for a display. The status of all settings is indicated as a percentage on LED strips immediately next to the relevant functions. LEDs also indicate the set speeds for the augers and the compacting systems as well as the fill level of the fuel tank.

Safe operation at night
Glare-free backlighting comes on automatically as darkness sets in so that the paver operator can also work safely on night-time jobs.

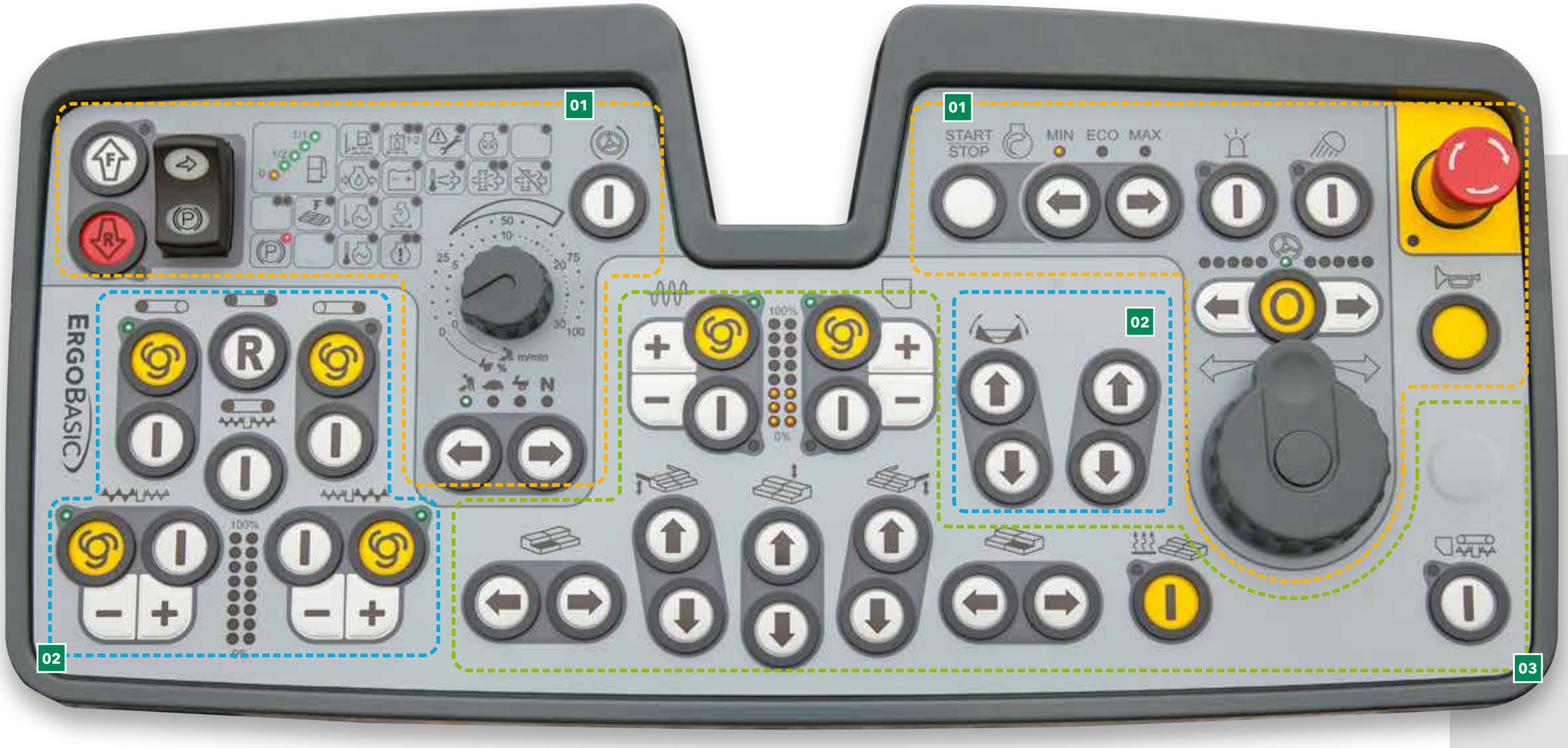

01 Drive and status display function group
All the functions for driving the paver are arranged together here. The status displays also provide an overview of machine status.

02 Material handling function group
The material handling function group includes operation of the hopper sides and of the conveyor and auger.

03 Screed function group
This function group includes all the screed functions such as settings for the tamper and vibrators and adjustment of screed width and angle.

DRIVE AND STATUS DISPLAYS

Module 1

01 Function and status indicators
The function and status indicators mean that the operator always has full control over his machine. He can, for instance, read the fill level of the fuel tank directly and identify whether there are any functional faults.

02 Choice of operating modes for the paver
At the touch of a button, the paver switches to Pave, Positioning, Job Site and Neutral modes. An LED indicates which mode is selected. On leaving "Pave" mode, the memory function stores all the most recent settings. After moving on the job site, the previously used paving parameters are instantly restored.

01 Given the limited number of functions, there is no need for a display.
02 The paver is steered by a rotary controller for simple, accurate manœuvring.

03 Choice of engine speed ranges
For the diesel engine, there is a choice of three modes to select from: MIN, ECO and MAX. To switch modes for engine rpm, all the operator needs to do is press the arrow buttons, up or down. In ECO mode, the engine delivers sufficient power for a great number of paving applications. Operating in ECO mode reduces noise emissions and fuel consumption considerably.

04 Steering at a pre-set angle
The machine is steered by means of an easy-grip rotary controller which enables the driver to manœuvre the machine easily and precisely even in the tightest spots. For long bends with a constant radius, the desired steering angle can be preselected using arrow keys. The paver then automatically follows the set path until the function is deactivated, allowing the driver to monitor the paving process undisturbed.

MATERIAL MANAGEMENT

Module 2

01 Reversing conveyor movement
In order to avoid mix dropping from the conveyors during a move of the paver on the job site, conveyor movement can be reversed at the push of a button. Reverse movement takes place for a short time only and stops automatically.

02 Automatic functions for material handling/distribution
These functions ensure that adequate mix for paving is automatically conveyed and distributed in front of the screed. The level of the head of mix in front of the screed is defined by a material sensor and the automatic system ensures that it remains constant. The function is only active during paving - if the paver stops, so does material handling.

The conveyor can be reversed at the touch of a button. Return transport of the mix is automatically stopped. The conveyor can be switched to the no-load function just as quickly.

03 Speed of the augers
In Automatic mode, the plus/minus buttons can be used to adjust the maximum auger speed separately for the right and left sides to suit the pave width, without the use of sonic sensors. The value, which is set in percent, is indicated by the LEDs.

SCREED FUNCTIONS

Module 3

01 Precompaction performance
The speeds of the compacting systems can be set directly on the paver operator's ErgoBasic console. The LED strips from 0 to 100% indicate the set speeds for the tamper and vibrators, allowing them to be adjusted immediately when required.

02 Screed settings
All settings can also be made from the paver operator's console, including raising or lowering the screed, extending or retracting either side of the screed, and adjusting the screed pitch to the site conditions. This means the paver operator also has access to the screed at all times.

01 Precompaction performance
02 Screed settings

03 Idling function
Idling function is provided for the warm-up or cleaning of conveyors, augers and tamper.

Screed heating system
In order to optimise compaction and produce a smooth surface texture, all compacting elements are heated across the full screed width. A simple push of a button is all it takes to switch the screed heating on or off. To ensure the screed heating system is working properly, an automatic function check is carried out when it is switched on.

ERGOBASIC REMOTE CONTROL UNIT FOR THE SCREED

Safe and easy handling of all screed functions is key to high-quality paving. That is why a remote control unit for the screed was developed specifically for the ErgoBasic operating system of the SUPER 1900-3 G.

The remote control's keypad is laid out logically according to the functional processes. Designed for robustness, it is well able to withstand tough job site conditions.

Operation is intuitive, and can be learned very quickly, not least because the symbols used in the tried and tested ErgoPlus operating system are found here too.

The ErgoBasic remote control unit for the screed allows all paving-related functions to be set quickly and easily. That includes direct access to the material handling systems and the sonic sensor for the auger.

01 Speed of the augers
Just like the paver operator, the screed operator can also select Manual or Automatic mode for the conveyors and augers.
The "Reversing Auger Rotation" function is very practical and user-friendly.

02 Screed floating
When the screed is in the floating position, the Screed Assist feature can also be activated.

03 Screed width control
The screed width on one side can be adjusted at any time at the push of a button.

Shown in original size

01 Setting of augers and conveyor (automatic/manual)

02 Screed floating on/off

03 Screed width control, one side

04 Adjustment of screed tow point ram

NIVELTRONIC BASIC

VÖGELE has also developed a System for Automated Grade and Slope Control to match the ErgoBasic operating system: Niveltronic Basic. It is fully integrated into the machine control system, so perfectly adapted to the specific paver model.

Another outstanding aspect of Niveltronic Basic is its very simple and intuitive handling, a feature which makes it easy even for less experienced operators to learn their way around the system. This creates ideal conditions for the small paver to work true to line and level on any base.

Each side of the screed is operated by a separate compact and highly robust Niveltronic Basic remote control unit. These units are easily removed from their magnetic brackets, giving operators far-reaching scope so they can always take up the optimum position for every paving job.

01

02

03

01 The LED sighting crosses also fitted to the sensor provide continuous, clearly visible feedback to the screed operator indicating whether the actual values match the settings made.
02 A variety of sensor types are available for Niveltronic Basic, in keeping with the machine's extensive and varied range of applications. The sensors extend from a mechanical sensor to non-contacting sonic sensors.
03 The pre-set and actual values for the grade and slope sensor can be read from the display of the Niveltronic Basic's control panel.

01 Deviation from specified values

02 Setting: Sensor sensitivity

03 Selecting: Referencing mode (Ground, Stringline, Transverse slope)

04 Quick set-up

05 Sensor calibration

VÖGELE > GOOD TO KNOW

Available sensors

Slope sensor
The slope sensor allows the transverse profile to be determined exactly and then paved accurately, The measuring range is +/- 10%.

Variable mechanical grade sensor
The variable mechanical grade sensor can be equipped with skis for referencing from the ground in 30 cm, 1 m and 2 m lengths.

Multi-cell sonic sensor
The multi-cell sonic sensor, with its four sensors, is highly versatile. By calculating an average, it can compensate for short irregularities in a reference.

Big MultiPlex Ski
The Big MultiPlex Ski compensates for extended undulations. Its 5 to 13 metre beam can be fitted with three multi-cell sonic sensors as standard – or with up to five if required.

01

02

03

04

05

06

ERGOBASIC PAVER OPERATOR'S PLATFORM

Improved efficiency, reliability and convenience

The user-friendly ErgoBasic paver operator's platform provides an unobstructed view of all key areas on the paver, such as the material hopper, steering guide or screed. It allows paver operators to easily monitor the mix feed to the paver from their seat for example.

01 Working comfort

> Easy displacement of the paver operator's console across the full width of the platform for convenient working in an ergonomical position on either side of the machine.

02 A place for everything and everything in its place

> The operator's stand, with its streamlined design, is well organized, offering the paver operator a professional workplace. The operator's console can be protected by a shatter-proof cover to prevent wilful damage.

03 Hardtop gives excellent protection

> The modern hardtop made of glass fibre-reinforced polymer material shelters the operator. The hardtop folds down with effortless ease, thus getting the paver quickly ready for transport.

04 Safe and convenient access

> The walkway and convenient central step on the screed ensure safe and convenient access to the operator's platform.

05 Economical and service-friendly design

> The operator has convenient access to all service points on the machine. All hydraulic pumps attached to the transfer gearbox, their clear arrangement and easy access provides for service-friendliness at the highest level. Sturdy components of highly wear-resistant materials for long service lives minimize downtime.

06 Safe and easy handling of all screed functions

> The ErgoBasic remote control unit for the screed allows all paving-related functions to be set quickly and easily.

> Each side of the screed is operated by two compact and exceedingly robust remote control units. These units are easily removed from their magnetic brackets, giving the operator a large range of action.

VÖGELE EXTENDING SCREEDS

The VÖGELE extending screeds are the preferred choice on all those jobs where pave width varies and prime pavement quality counts. Thanks to their sturdy single-tube telescoping system, these screeds can be set quickly and accurately to any pave width desired. The electric heating warms the screed up to its operating temperature much more quickly.

In automatic operation, the screed is heated in Alternating mode, which means that only one half is heated at any one time, thus sparing the engine and saving fuel.

The VÖGELE extending screeds for SUPER 1900-3 G are available in TV version (with tamper and vibrators).

Uniform screed heating
of screed plates, tamper bar and pressure bars for uniform surface courses

Much shorter preheating time
thanks to intelligent generator management of the electric heating system even when the engine is idling

Alternating mode for screed heating
alternately powering one half of the screed heating system

Hydraulic crown adjustment
The crown can be conveniently adjusted at the press of a button on the screed operator's console.

The AB 480 and AB 500 Extending Screeds have a basic width of 2.55 m. The AB 480 can be extended to 4.8 m hydraulically and to 7.8 m with bolt-on extensions. The Classic Line screed also has only a reduced number of optional extras. The AB 500 can be fitted with all the optional extras for screeds and extends to a width of 5 m hydraulically, with a maximum pave width of 8.5 m.

Furthermore, the machine can also be combined with the 3 m basic width extending screeds AB 570 and 600. Through the addition of bolt-on extensions, the AB 570 build up to a maximum width of 8.7 m and the AB 600 up to a maximum width of 10 m.

AB 480

Pave widths
> Infinitely variable range from 2.55 m to 4.8 m
> Maximum pave width using bolt-on extensions:
  > 7.8 m (4 x 75 cm)

Compacting systems
> AB 480 TV with tamper bar and vibrators

AB 500

Pave widths
> Infinitely variable range from 2.55 m to 5 m
> Larger widths through the addition of bolt-on extensions up to a maximum of 8.5 m

Compacting systems
> AB 500 TV with tamper and vibrators

AB 570

Pave widths
> Infinitely variable range from 3 m to 5.7 m
> Maximum pave width using bolt-on extensions:
  > 8.7 m (4 x 75 cm)

Compacting systems
> AB 570 TV with tamper bar and vibrators

AB 600

Pave widths
> Infinitely variable range from 3 m to 6 m
> Larger widths through the addition of bolt-on extensions up to a maximum of 10 m

Compacting systems
> AB 600 TV with tamper and vibrators

AB 480 TV

Built up to maximum pave width

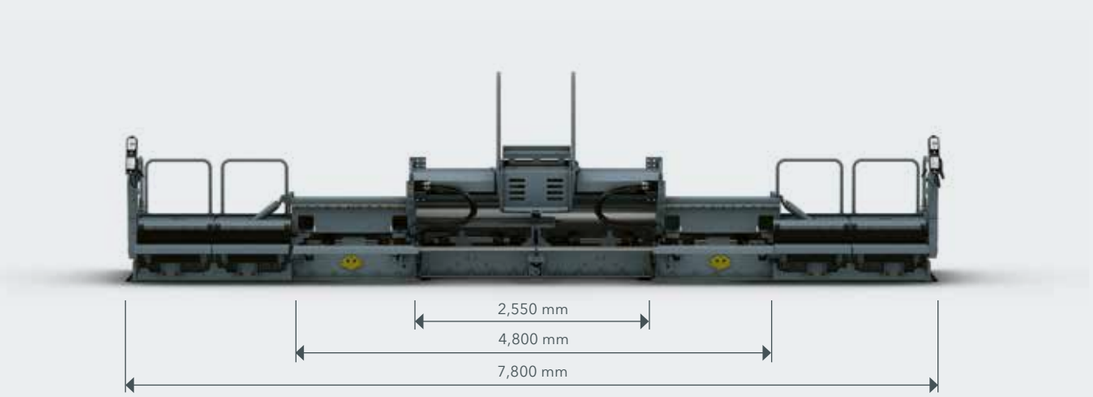

AB 570 TV

Built up to maximum pave width

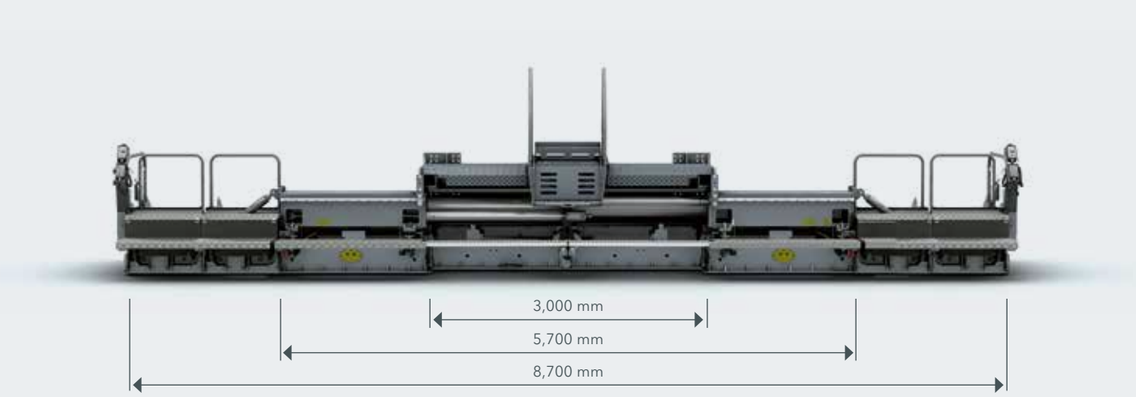

AB 500 TV

Built up to maximum pave width

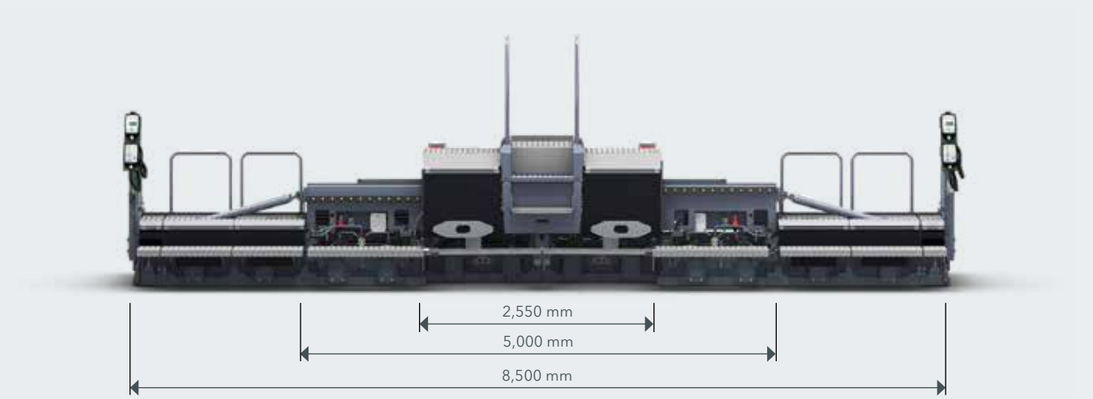

AB 600 TV

Built up to maximum pave width

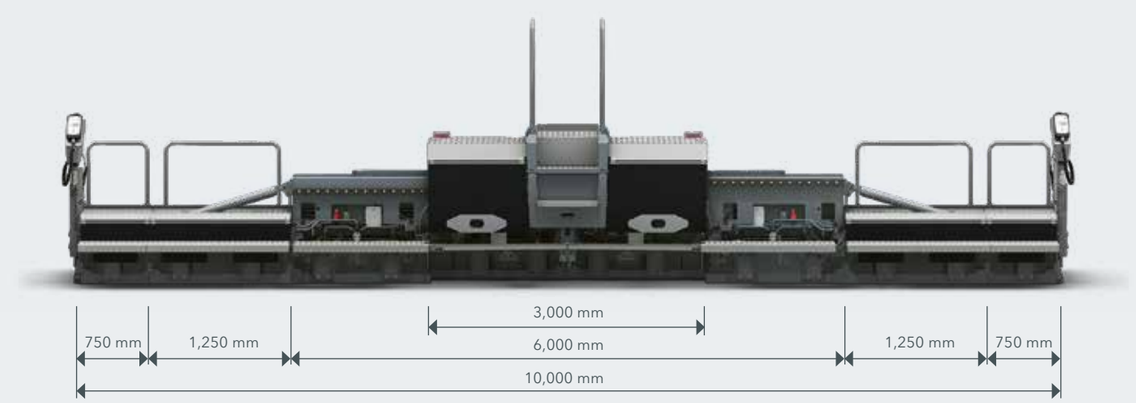

SB 300 HD FIXED-WIDTH SCREED

For roadbase applications

Fixed-width screeds from VÖGELE deliver absolutely high-quality, perfectly even results. They show their strengths wherever large pave widths need to be handled, when laying down thick layers (e.g. crushed stone base courses) and where high degrees of precompaction have to be achieved.

The SUPER 1900-3 G can be combined with the SB 300 HD Fixed-Width Screed.

The SB 300 HD has been specially developed for the placing of cold materials in roadbase construction such as cement-treated base (CTB). Its deep screed plates make for an excellent floating behaviour.

Depending on the layer thickness and material, the tamper stroke can be set to 2, 4 or 7 mm. In combination with the special tamper geometry, this ensures particularly high compaction values.

SB 300 HD

Pave widths

> Basic width 3 m. Larger widths if bolt-on extensions up to a maximum of 9.5 m are added

> Specifically for use in sub-base construction, so no screed heating system

Compacting systems

> SB 300 HD with tamper

SB 300 HD

Built up to maximum pave width

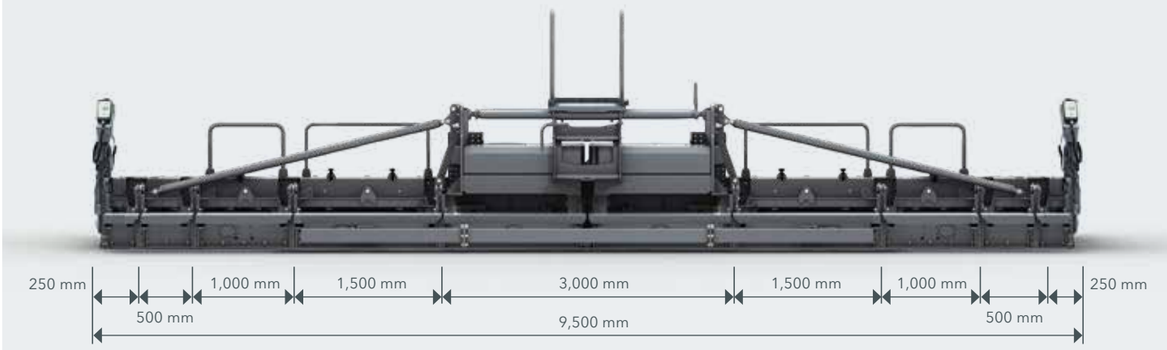

ALL THE FACTS AT A GLANCE

SUPER 1900-3 G Tracked Paver

TECHNICAL DATA

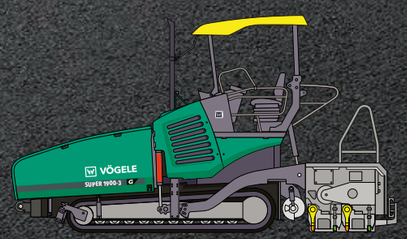

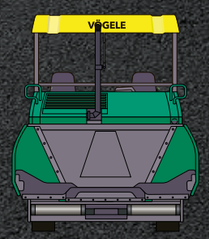

SUPER 1900-3 G

> Maximum pave width: 10 m

> Maximum laydown rate: 1,000 t/h

> Layer thickness: max. 50 cm

> Transport width: 2.55 m

WIRTGEN GROUP CUSTOMER SUPPORT

Service you can rely on.

You can have confidence in reliable, swift support from us during the entire life cycle of your machine. Our wide range of services is ready with the right solution to every challenge you face.

Service
We keep our service promise with swift, straightforward assistance - on the job site or at our professional workshops. Our service team is trained to a professional standard and dedicated tools ensure that repair, care and maintenance tasks are completed quickly. We can support you with customised service agreements on request.
> www.wirtgen-group.com/service

Spare Parts
WIRTGEN GROUP original parts and accessories assure the long-term reliability and availability of your machines. Our experts will also be pleased to advise you about optimised wear part solutions to suit your application. Our parts are available all over the world at all times and are easy to order.
> parts.wirtgen-group.com

Training
The WIRTGEN GROUP brands are specialists in their field with decades of experience in applications; our customers benefit from this expertise. In our WIRTGEN GROUP training courses, we are delighted to to pass our knowledge on to you, customised to suit both operators and servicing staff.
> www.wirtgen-group.com/training

Telematics solutions
Construction machines with leading technology and perfected telematics solutions work hand-in-hand in the WIRTGEN GROUP. The Operations Center* – the digital platform for process, machine and service optimisation – enables you to not only simplify maintenance planning for your machines, but also to increase your productivity and cost-effectiveness.
> www.wirtgen-group.com/telematics

* The John Deere Operations Center™ (formerly WITOS) is currently not available in all countries. Please consult your responsible subsidiary or dealer if you have any questions.

VÖGELE

JOSEPH VÖGELE AG

Joseph-Vögele-Str. 1
67075 Ludwigshafen
Germany

T: +49 621 8105-0
F: +49 621 8105-461
M: marketing@voegele.info

www.voegele.info

For more information, scan the QR code.

The WIRTGEN GROUP, a subsidiary of John Deere GmbH & Co. KG, Joseph Vögele Aktiengesellschaft and the companies associated with them protect their intellectual property. In particular, the names WIRTGEN, VÖGELE, HAMM, KLEEMANN, BENNINGHOVEN, CIBER and WITOS, the WIRTGEN GROUP Road logo, ERGOPLUS, NAVITRONIC, NIVELTRONIC, RoadScan, SprayJet, VÖGELE PowerFeeder, PaveDock, AutoSet, ErgoBasic and VÖGELE-EcoPlus, together with a great many other names of products and systems, are registered trade marks in many countries. All information and images contained herein are non-binding and may contain optional equipment. We reserve the right to make technical modifications without prior notice.
Performance data is dependent on the operating conditions. © **JOSEPH VÖGELE AG** 2025 – No. 3121077 EN-02/25 – V04